OMS GROUP®

STRAPPING MACHINES

PACKAGING SOLUTIONS. SINCE 1949

STRAPPING HEADS

Photo: TR2000

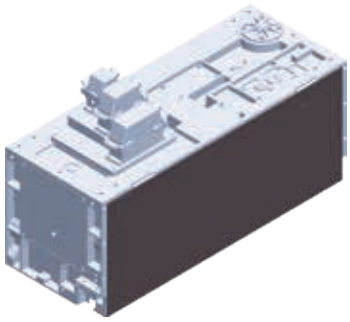

TR1400-1400HD

Strap type	PP - PET
Strap width	9 ÷ 16 mm
Strap thickness	0,6 ÷ 1 mm
Max feeding and recovery speed	5,5 m/s
Strap tensioning	2300 N
Utilization temperature	-10° ÷ 50° C
Noise level	< 70 dB
Options	Strap refeeding device

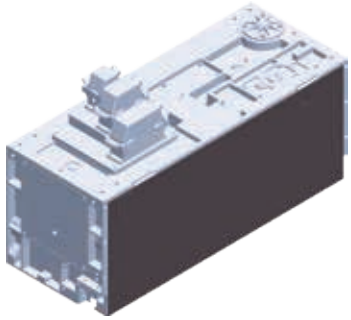

TR1800

Strap type	PET
Strap width	12 ÷ 19 mm
Strap thickness	0,6 ÷ 1 mm
Max feeding and recovery speed	2,7 m/s
Strap tensioning	4000 N
Utilization temperature	-10° ÷ 50° C
Noise level	< 70 dB
Options	Strap refeeding device

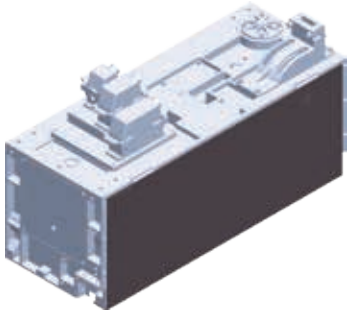

TR2000

Strap type	PET
Strap width	16 ÷ 19 mm
Strap thickness	0,8 ÷ 1,3 mm
Max feeding and recovery speed	2,7 m/s
Strap tensioning	7000 N
Utilization temperature	-10° ÷ 50° C
Noise level	< 70 dB
Options	Strap refeeding device

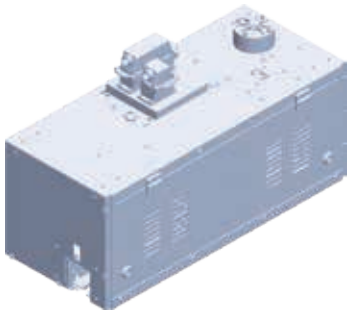

TR200

Strap type	PP
Strap width	8 ÷ 12 mm
Strap thickness	0,5 ÷ 0,8 mm
Max feeding and recovery speed	4,4 or 8,8 m/s
Strap tensioning	Up to 1500 N
Utilization temperature	-10° ÷ 50° C
Noise level	< 70 dB
Options	Strap refeeding device

Photo: VYBRO Plus

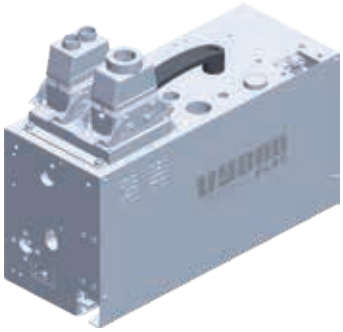

VYBRO Plus | Friction Sealing Technology

Strap type	PET - PP
Strap width	9 ÷ 12 mm
Strap thickness	0,4 ÷ 0,6 mm
Max feeding and recovery speed	5,5 m/s
Strap tensioning	Up to 1500 N
Utilization temperature	+5° ÷ 50° C
Noise level	< 70 dB
Options	Strap refeeding device

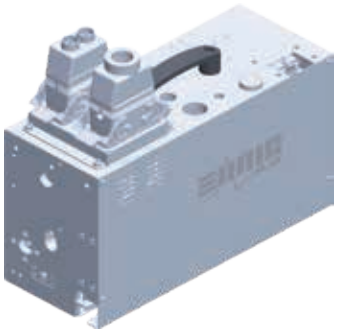

SONIC Plus | Ultrasonic Sealing Technology

Strap type	PET - PP
Strap width	9 ÷ 12 mm
Strap thickness	0,4 ÷ 0,6 mm
Max feeding and recovery speed	5,5 m/s
Strap tensioning	Up to 1500 N
Utilization temperature	-10° ÷ 50° C
Noise level	< 70 dB
Options	Strap refeeding device

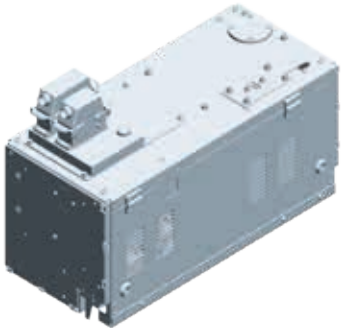

HS1300

Strap type	PP
Strap width	9 ÷ 16 mm
Strap thickness	0,6 ÷ 1,0 mm
Max feeding and recovery speed	7,0 m/s
Strap tensioning	Up to 3500 N
Utilization temperature	+5° ÷ 50° C
Noise level	< 70 dB
Options	Strap auto load

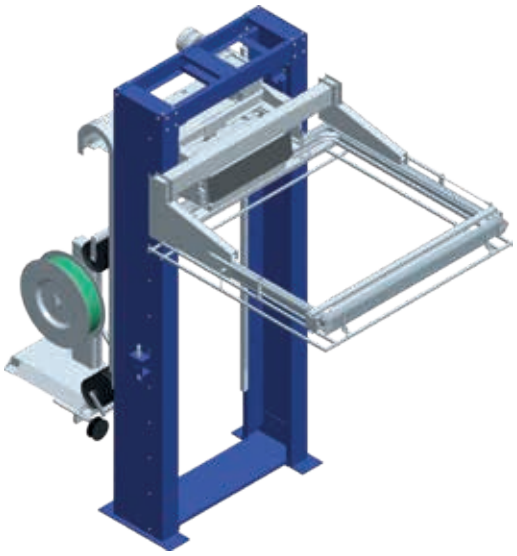

06RP

Horizontal strapping machine

Strapping heads that can be used	TR1400 / TR1400HD (PET / PP) TR1800 (PET)

Applications: Construction, Plastic/Cans, Glass

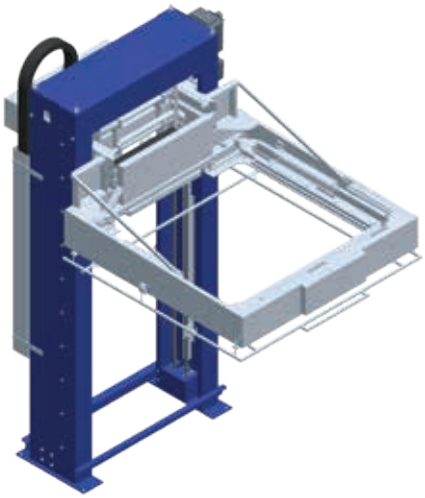

06C

Horizontal strapping machine

Strapping heads that can be used	TR1400 / TR1400HD (PET / PP)
Options	- Edgeboard application device - Model 06CL with compactor only for Glass

Applications: Construction, Ceramic, Glass

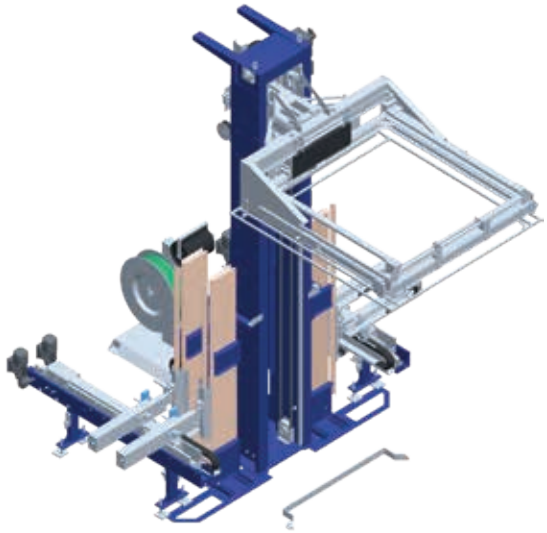

06GS

Horizontal strapping machine

Strapping heads that can be used	TR1400 (PET / PP) TR200 (PP)
Options	Edgeboard application device

Applications: Fruit

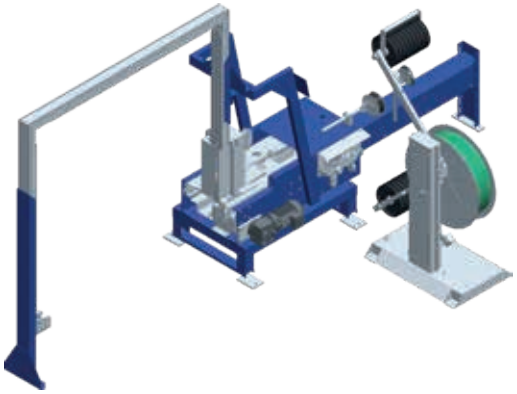

0875AB

Lateral strapping machine with movable head and sword

Strapping heads that can be used	VYBRO PLus / SONIC Plus TR1400 / TR1400HD (PET / PP) TR1800 (PET) / TR200 (PP)
Options	Available model 0875 (fixed arch & head) Available model 0875A (fixed arch & movable head)

Applications: White goods, Plastic/Cans

PRESS MASTER BASE

Vertical strapping press

Strapping heads that can be used	VYBRO PLus / SONIC Plus TR1400 / TR1400HD (PET / PP)
Options	- Lift and turn device - Centering device

Applications: Paper, Cardboards, Wood & profiles

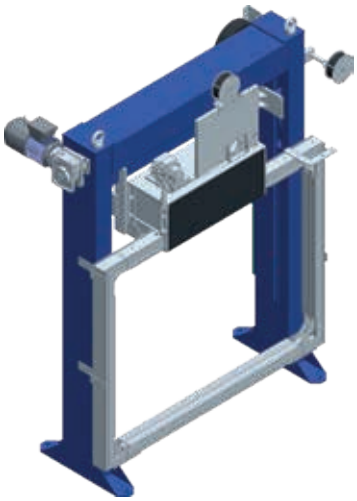

08 ACTIVE

Vertical strapping machine

Strapping heads that can be used	TR1400 / TR1400HD (PET / PP) TR2000 (PET)
Options	Top / Bottom / Side fillet applicator

Applications: Ceramic

08RP

Vertical strapping machine

Strapping heads that can be used	TR1400 / TR1400HD (PET / PP) TR1800 / TR2000 (PET)
Options	- Shifting device - Sword - Model 08RPH only for Glass

Applications: Ceramic, Paper, Wood & profiles, Plastic/Cans

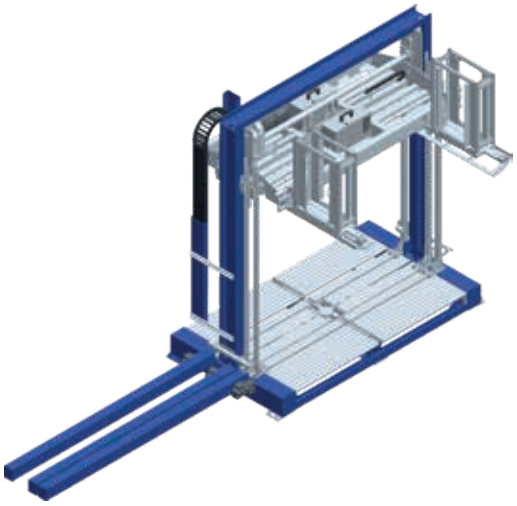

PRESS MASTER PLUS

Cardboard strapping press

Strapping heads that can be used	VYBRO PLus / SONIC Plus TR1400 / TR1400HD (PET / PP)
Options	- Upper & lower edge cardboard applicator - Lift and turn device - Centering device

Applications: Cardboards, Paper

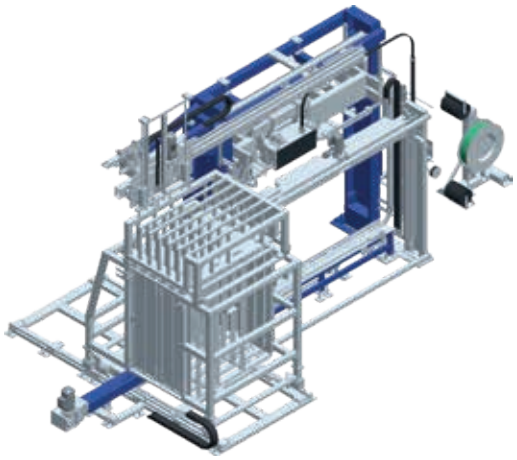

08CH

Vertical strapping machine timber and chipboard

Strapping heads that can be used	TR1400HD / TR1800 / TR2000 (PET)
Options	- Upper & lower edgeboard application device - Upper, lower and lateral wooden runner device

Applications: Wood & profiles

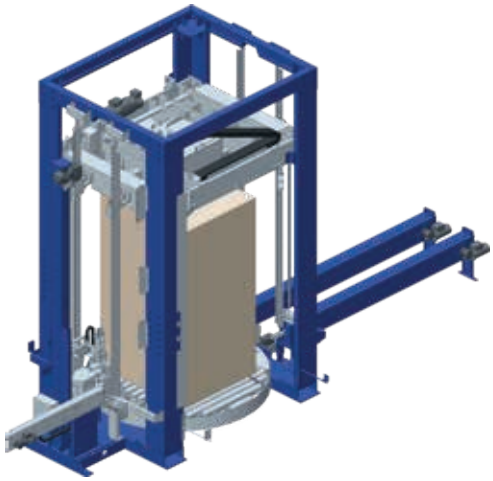

AVFP2

Combined strapping/wrapping machine

Strapping heads that can be used	VYBRO PLus / SONIC Plus TR1400 / TR1400HD (PET / PP)
Options	Edgeboard application device

Applications: Cardboards

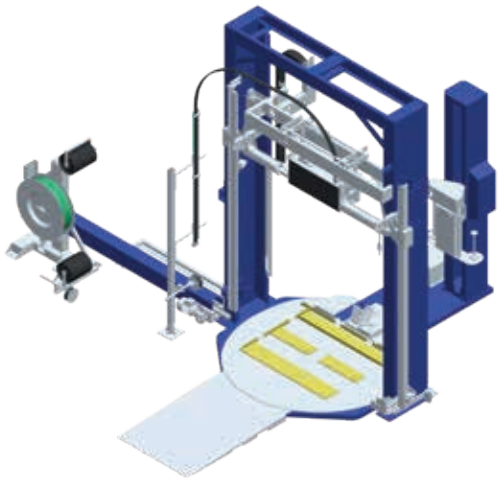

08 COMBO

Combined strapping/wrapping machine

Strapping heads that can be used	VYBRO PLus / SONIC Plus TR1400 / TR1400HD (PET / PP) TR1800 / TR2000
Options	1800 or 2000 mm turntable 3000 mm high packs

Applications: Logistic, Fruit, Paper, Cardboards, Ceramic, Wood & profiles, Plastic/Cans

OMS GROUP

STRAPPING

MOD.

PBTR

REEL HOLDER WITH ROTATING TURNABLE

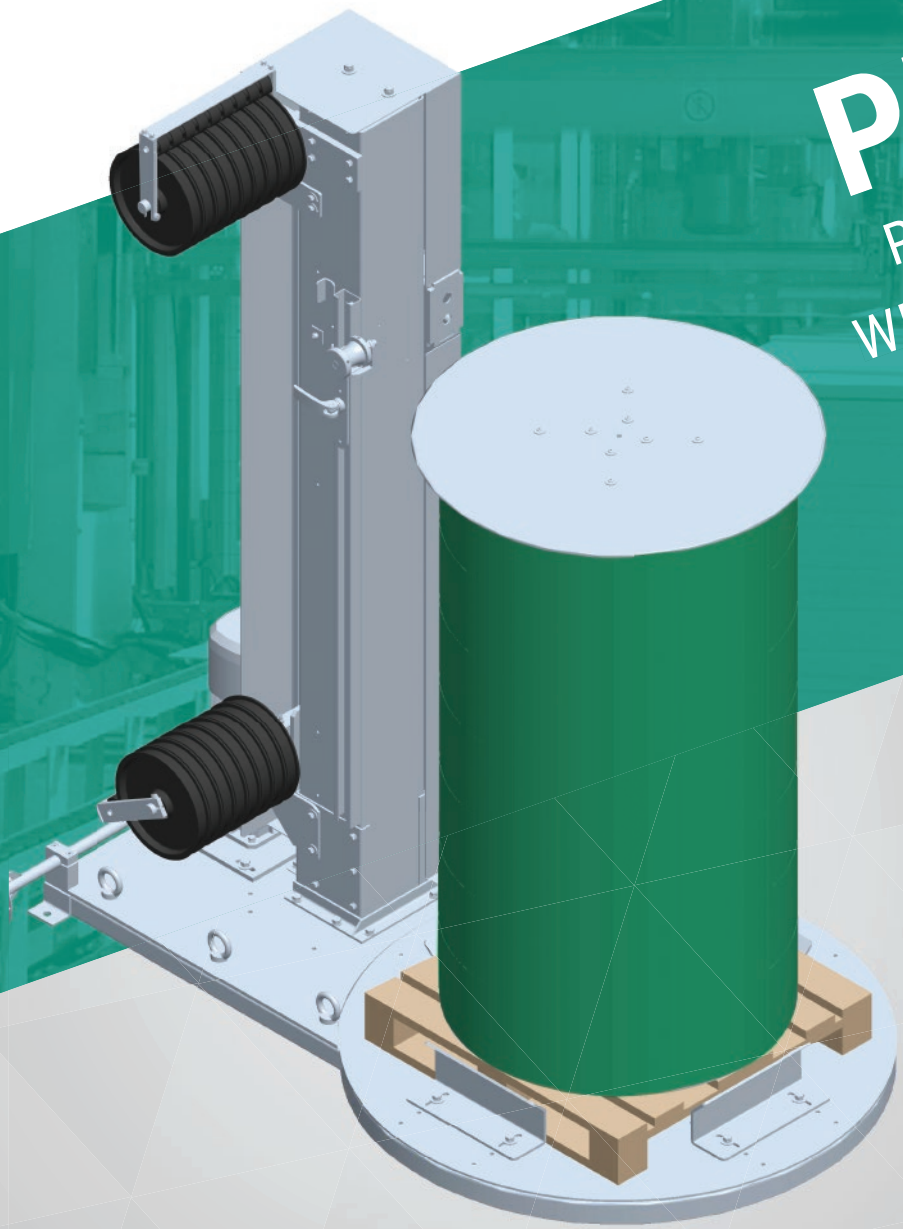

Applications

Construction | Paper | Cardboard | Plastic/Can | Glass | Wood

PBTR Reel holder with rotating table

PTBR_EN

The PBTR reel holder has been designed to speed up strap replacement operations. The equipment is fitted with a motorized rotating table that allows to load pallet with five different sizes and diameters of reels and a control panel to manage operations. Pallet of coils can be loaded with forklift or manual transpallet through loading ramp (optional).

Technical data

Power supply	
Voltage	400 V (+/-10%) - 50Hz
Installed power	~ 1,1 kW

Coil data	
Max. number loadable	5
Max. load weight	600 Kg

Rotating table	
Diameter	ø 1100 mm
Rotation speed	19,8 rpm

- Loading ramp for manual transpallet (Optional)

JUMBO COIL Strap		S.JUMBO COIL Strap	
Dimensions	Meters per reel	Dimensions	Meters per reel
15,5 X 0,90	3810	19,0 X 0,85	7200
15,6 X 0,95	3700	19,0 X 0,95	6400
16,0 X 0,80	4200	19,0 X 1,00	6000
16,0 X 1,00	3400	19,0 X 1,20	5000
19,0 X 0,85	3400	25,0 X 0,80	5800
19,0 X 0,95	3000	25,0 X 1,00	4600
19,0 X 1,00	2900	25,0 X 1,27	3600
19,0 X 1,20	2400	32,0 X 1,00	3600
25,0 X 0,80	2700	32,0 X 1,27	2800
25,0 X 1,00	2200		
25,0 X 1,27	1700		
32,0 X 1,00	1700		
32,0 X 1,27	1300		

Standard machine dimensions

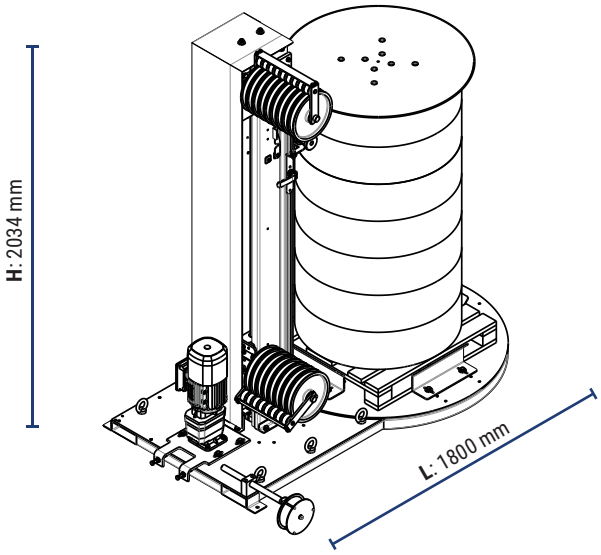

Coil size	
Type of Strap	Dimensions OD x ID x H (mm)
JUMBO	750 x 406 x 190
S.JUMBO	950 x 406 x 250

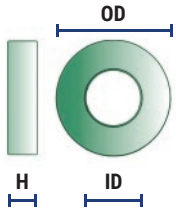

Pack sizes	
Strap type / Nr. of reels	Dimensions L x W x H (mm)
JUMBO / 5	750 x 750 x 1100
S.JUMBO / 4	950 x 950 x 1100 *

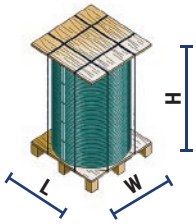

*** Wood pallet must be adapted to be loaded (the corners must be cutted)**

Detail of strap guide device

Detail of control panel

Officina Meccanica Sestese S.p.A.

Via Borgomanero, 44 - 28040 Paruzzaro (NO)

Tel.+39 0322 541411 Fax +39 0322 53157

www.omsspa.com

info@omsspa.com

As a part of our policy of **continuous improvement**, we reserve the right to alter design and specifications without prior notice.
This brochure is for descriptive purpose only. Some of the items pictured in this brochure are optional and not standard equipment.

OMS GROUP

STRAPPING

MOD.

MEGAJUMBO

REEL HOLDER WITH ROTATING TURNABLE

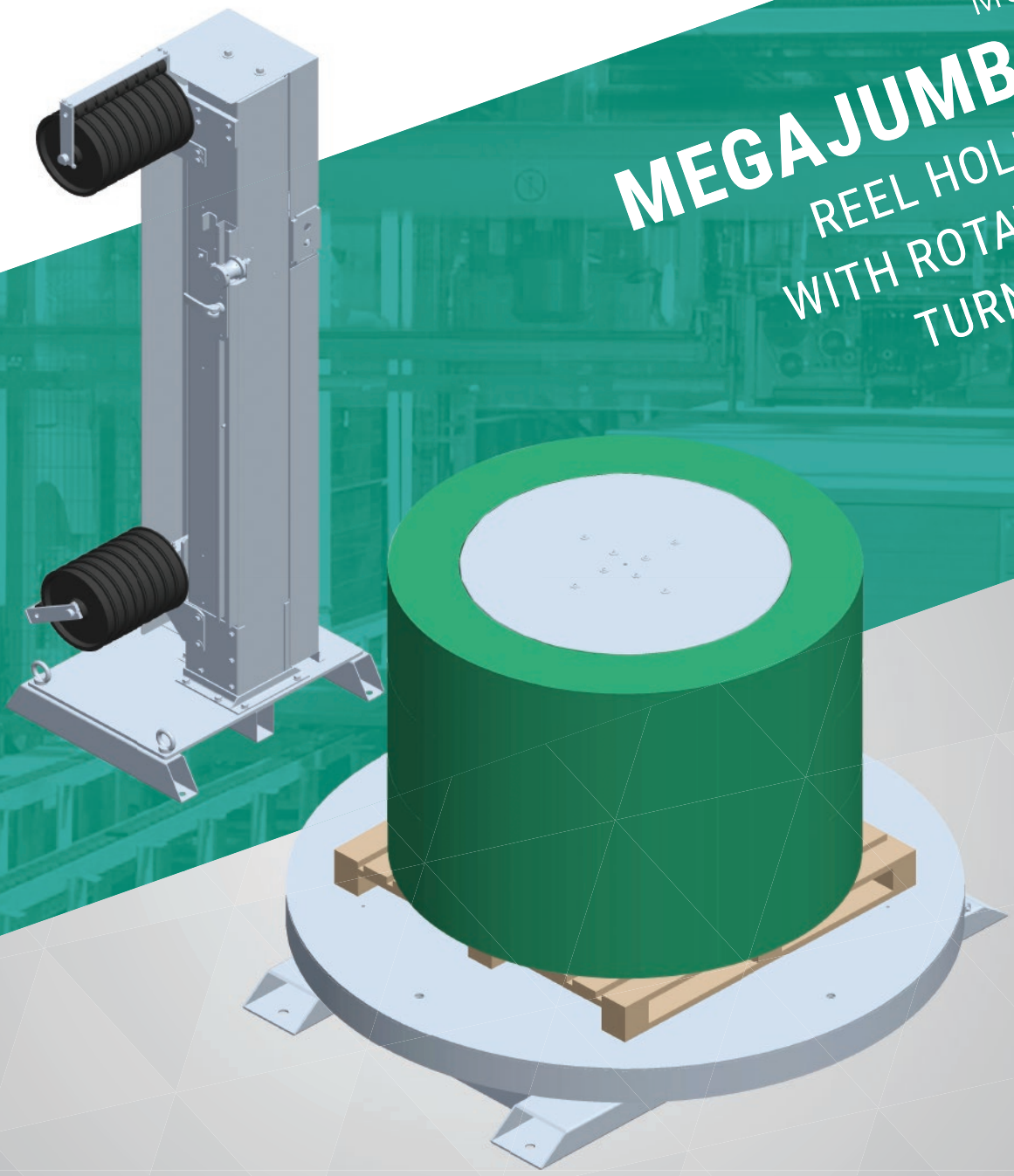

Applications

Wood

Paper

Cardboard

Plastic/Can

Glass

Construction

MEGA JUMBO Reel holder with rotating table

MEGA_T_EN

This special MEGA JUMBO reel holder has been designed to speed up strap replacement operations, especially in the timber sector. The equipment is fitted with a motorized rotating table and a separated motorized column. This reeel holder is suitable to be used in different production sectors. It can load strap coils up to ø 1150mm, with a maximum load of 1000 kg. Its rotary table is 250 mm high so the pallet of coils can only be loaded with a forklift.

Technical data

Power supply	
Voltage	400 V (+/-10%) - 50Hz
Installed power	~ 1,1 kW

Coil data	
Max. number loadable	3
Max. load weight	1000 Kg

Rotating table	
Diameter	ø 1650 mm
Rotation speed	18 rpm

Coil size	
Type of strap coil	MEGA JUMBO
Dimensions	OD 1150 x ID 406 x H 305 mm

Pack sizes	
Coil type / Nr. of reels	MEGA JUMBO / 3
Dimensions	L 1150 x W 1150 x H 915 mm

Standard machine dimensions

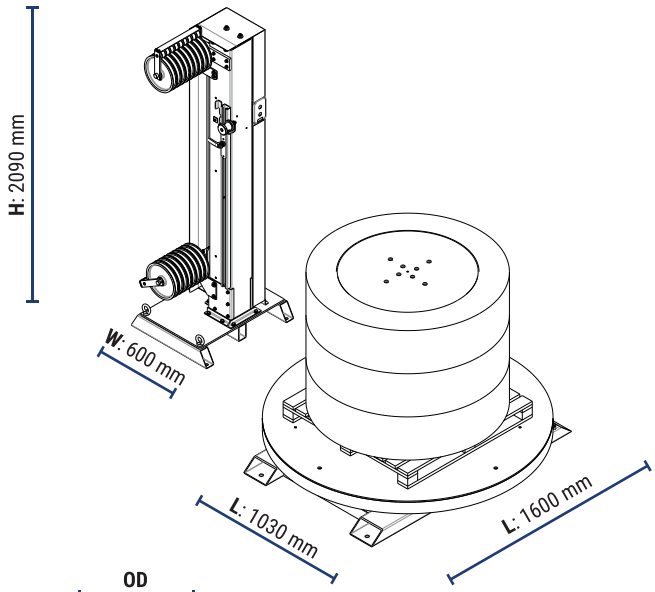

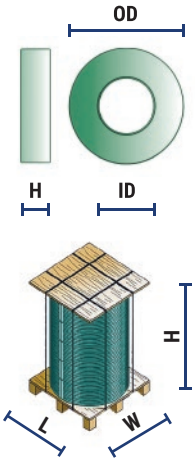

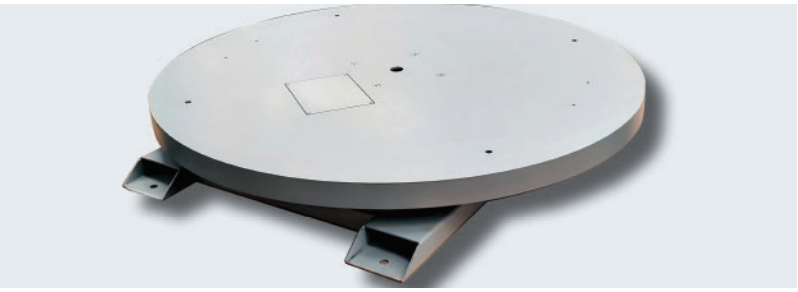

Detail of motorized rotating table

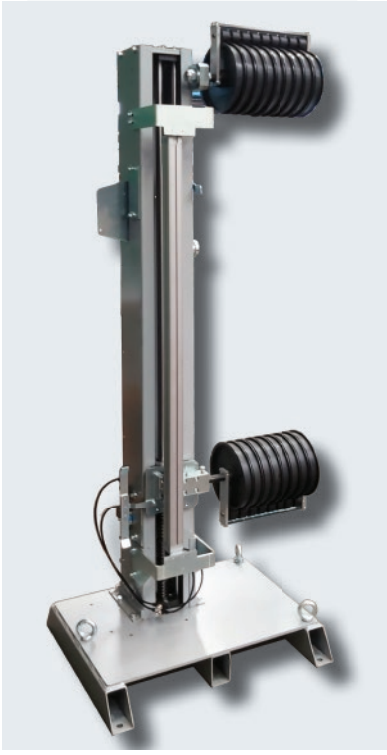

Detail of motorized column

Officina Meccanica Sestese S.p.A.

Via Borgomanero, 44 - 28040 Paruzzaro (NO)

Tel.+39 0322 541411 Fax +39 0322 53157

www.omsspa.com

info@omsspa.com

As a part of our policy of **continuous improvement**, we reserve the right to alter design and specifications without prior notice.
This brochure is for descriptive purpose only. Some of the items pictured in this brochure are optional and not standard equipment.

STRAPPING

MOD.

MEGAJUMBO

REEL HOLDER WITH ROTATING TURNABLE

SPECIAL VERSION

Applications

Bales

MEGA JUMBO Reel holder with rotating table

MEGA_H_EN

This special MEGA JUMBO reel holder has been designed to speed up strap replacement operations, especially in bale hay sector. The equipment is fitted with a motorized rotating table and a separated motorized storage dispenser. This reeel holder is suitable to be used with small arches and high production. It can load strap coils up to ø 1150mm, with a maximum load of 1000 kg. Its rotary table is 250 mm high so the pallet of coils can only be loaded with a forklift.

Technical data

Power supply	
Voltage	400 V (+/-10%) - 50Hz
Installed power	~ 1,1 kW

Coil data	
Max. number loadable	3
Max. load weight	1000 Kg

Rotating table	
Diameter	ø 1650 mm
Rotation speed	18 rpm

Coil size	
Type of strap coil	MEGA JUMBO
Dimensions	OD 1150 x ID 406 x H 305 mm

Pack sizes	
Coil type / Nr. of reels	MEGA JUMBO / 3
Dimensions	L 1150 x W 1150 x H 915 mm

Standard machine dimensions

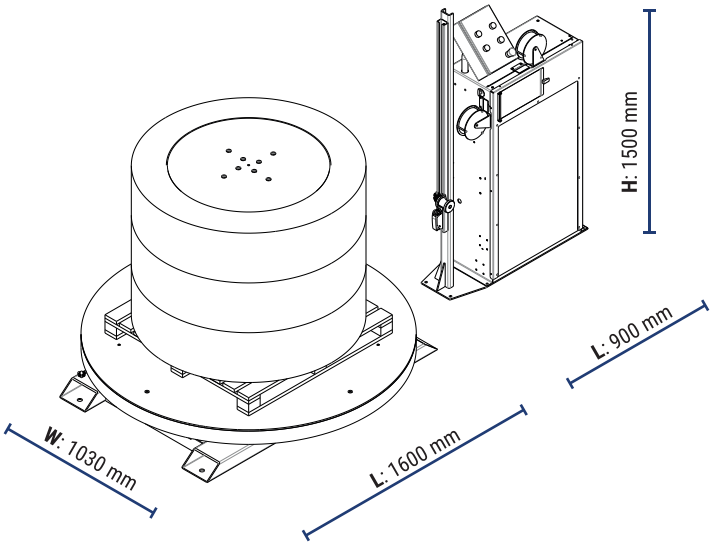

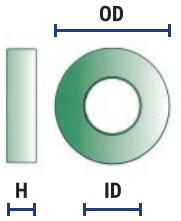

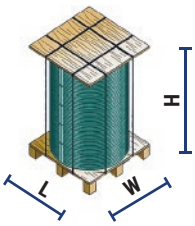

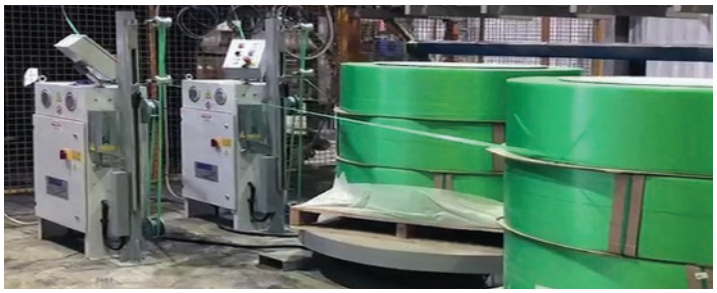

Detail of motorized storage dispenser and turntable

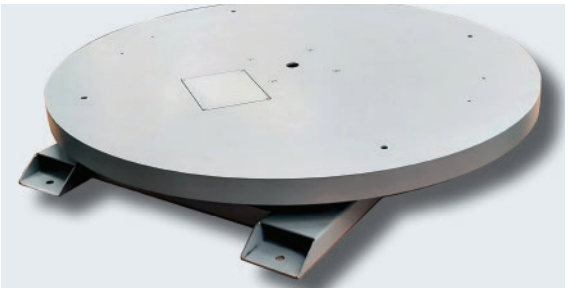

Detail of motorized rotating table

Officina Meccanica Sestese S.p.A.

Via Borgomanero, 44 - 28040 Paruzzaro (NO)

Tel.+39 0322 541411 Fax +39 0322 53157

www.omsspa.com

info@omsspa.com

As a part of our policy of **continuous improvement**, we reserve the right to alter design and specifications without prior notice.
This brochure is for descriptive purpose only. Some of the items pictured in this brochure are optional and not standard equipment.

OMS GROUP®

STRETCH HOOD MACHINES

PACKAGING SOLUTIONS. SINCE 1949

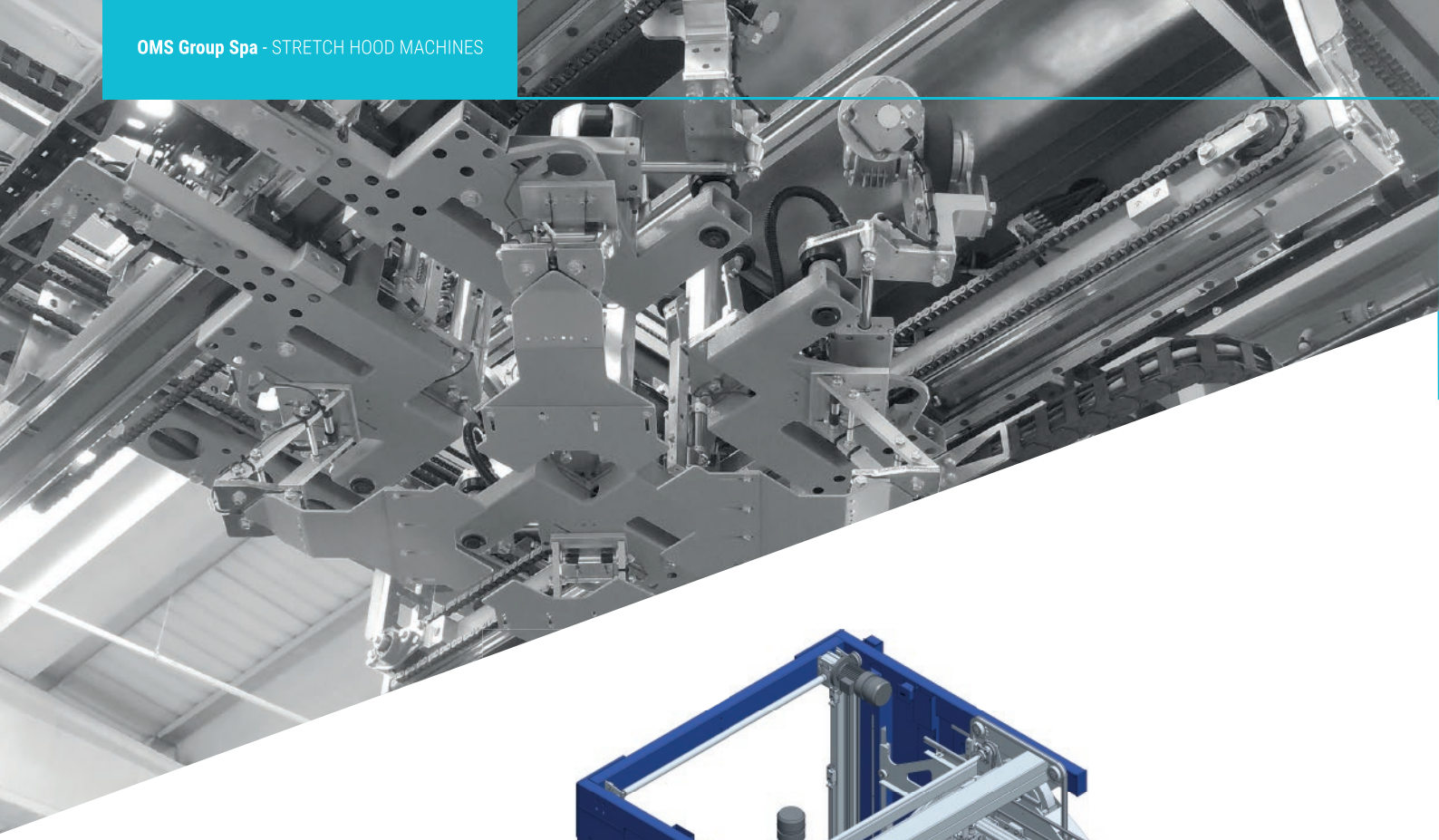

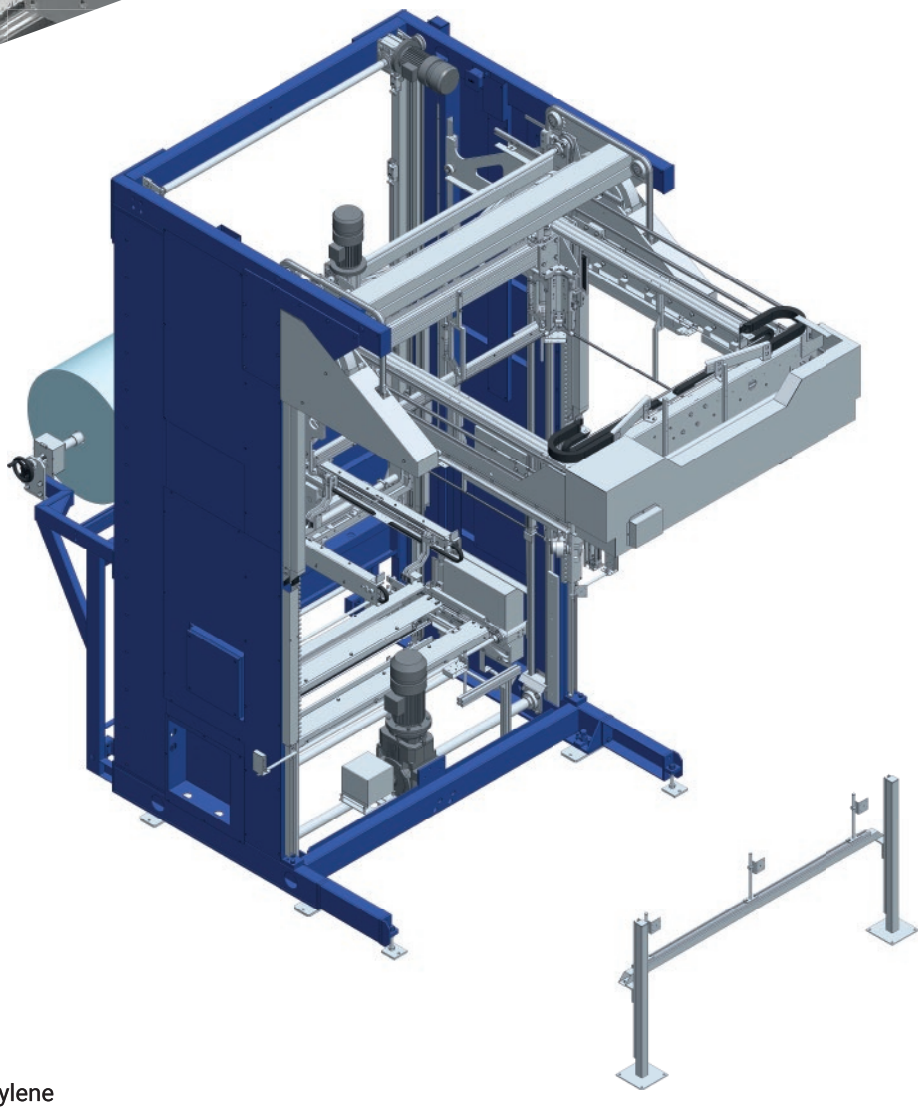

IS43

Stretch hooding machine

Film type	Stretch polyethylene
Production capacity	From 25 to 120 pallets/hour
Options	Lifting device Infeed centering device Double or triple coils

Applications: Ceramic, Construction, White goods, Plastic/Cans, Bags

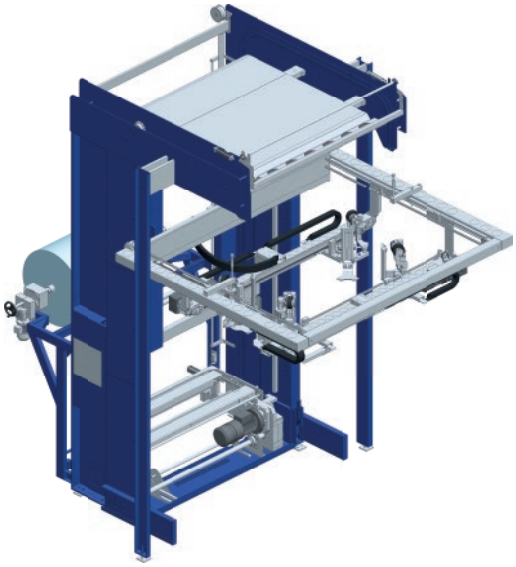

IS44

Stretch hooding machine

Film type	Stretch polyethylene
Production capacity	Up to 100 pallets/hour
Options	Lifting device Infeed centering device Double or triple coils Shifting coil-holder

Applications: Ceramic, Construction, White goods, Plastic/Cans, Bags

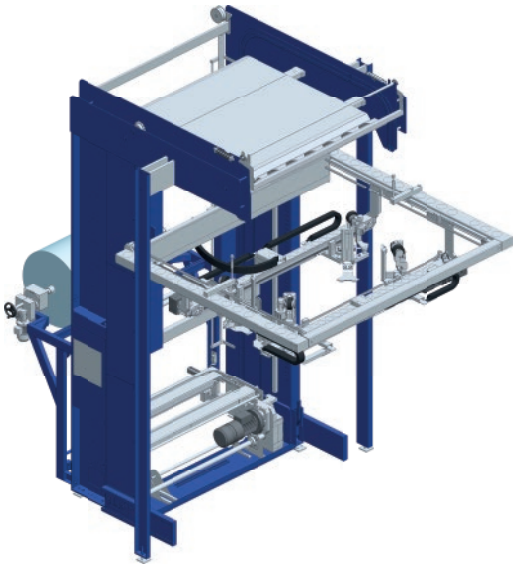

IS46

Stretch hooding machine

Film type	Stretch polyethylene
Production capacity	Up to 220 pallets/hour
Options	Lifting device Infeed centering device Double or triple coils Shifting coil-holder

Applicazioni: Paper, Cardboards, Construction, Plastic/Cans, Bags

OMS GROUP®

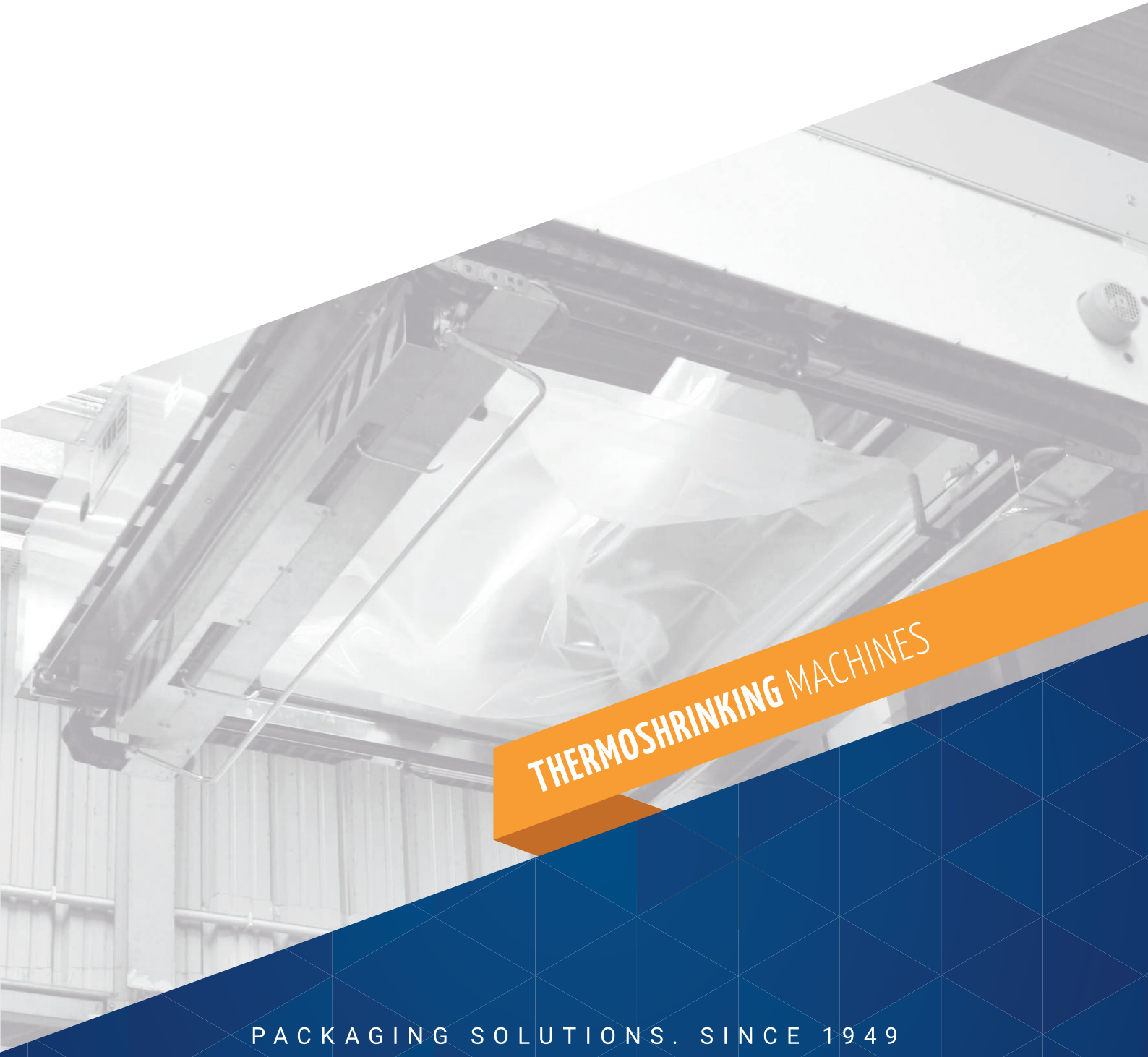

THERMOSHRINKING MACHINES

PACKAGING SOLUTIONS. SINCE 1949

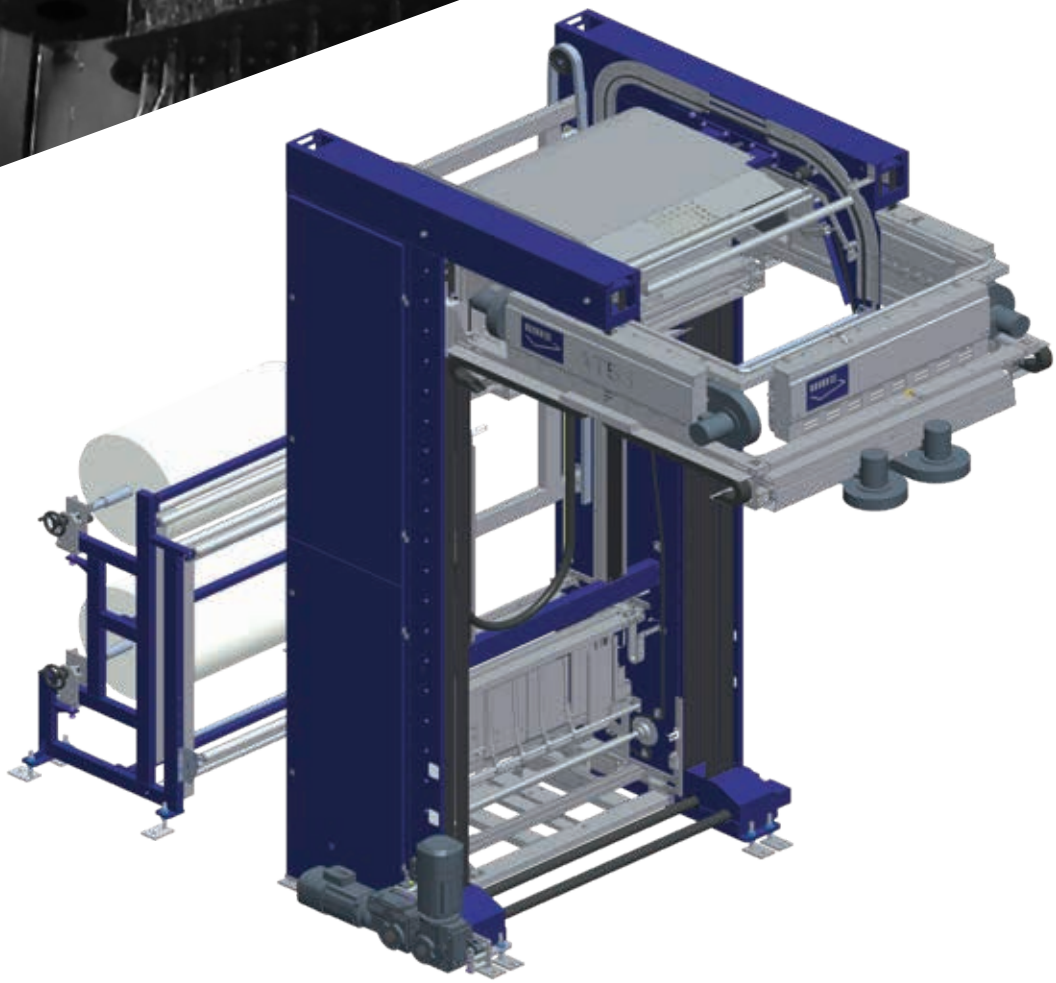

AT55

Thermoshrinking hooding machine

Film type	Polyethylene thermo (LDPE)
Production capacity	Up to 70 packs/hour
Options	Lifting device Infeed centering device Double or triple coils

Applications:

Glass

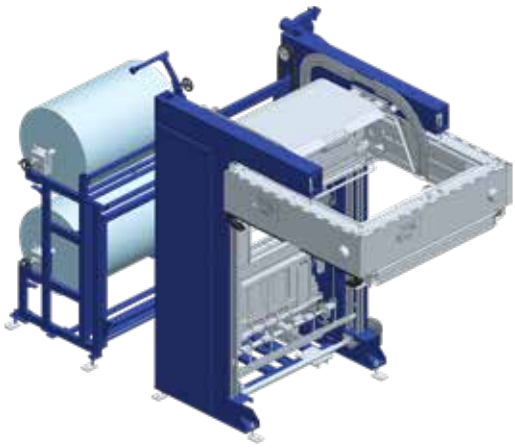

AT53

Thermoshrinking hooding machine

Film type	Polyethylene thermo (LDPE)
Production capacity	60 packs/hour
Options	Lifting device Infeed centering device Double or triple coils

Applications: Ceramic, Construction, Glass, White goods, Plastic/Cans, Bags

FT22

Thermoshrinking oven

Film type	Polyethylene thermo (LDPE)
Platform's max. load capacity	2000 kg
Options	Gas pressure reduction ramp Pack loading ramp

Applications: Ceramic

FT55

Thermoshrinking oven

Film type	Polyethylene thermo (LDPE)
Production capacity	60 packs/hour
Options	Lifting device Available for LPG/Propane

Applications: Ceramic, Glass, Plastic/Cans, Bags, Construction

OMS GROUP®

STRETCH WRAPPING MACHINES

PACKAGING SOLUTIONS. SINCE 1949

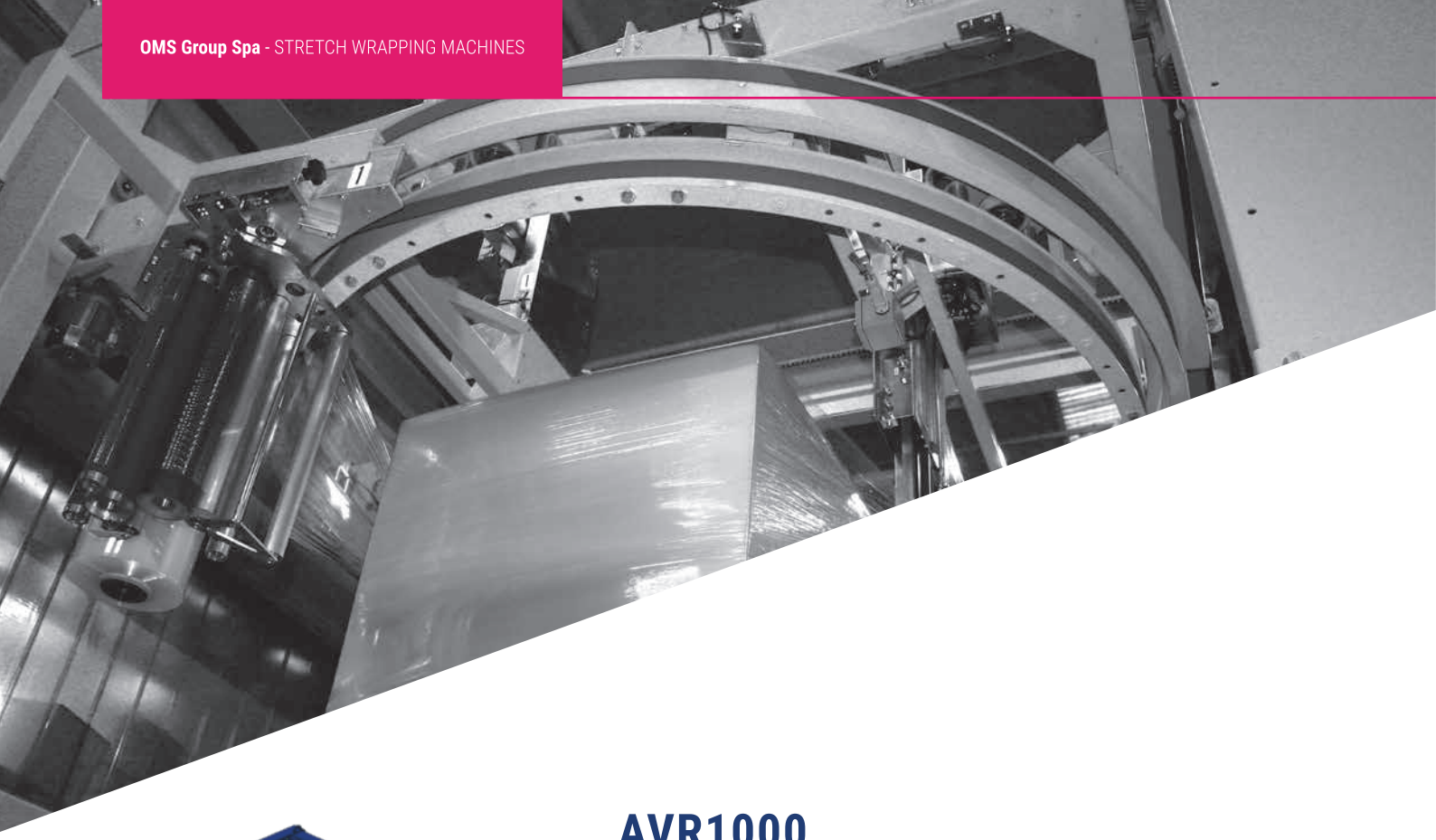

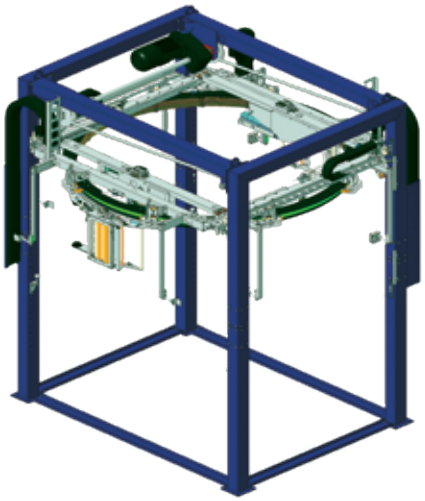

AVR1000

Ring wrapping machine

Film type	Stretch polyethylene
Production capacity	Up to 100 packs/hour (140 p/h Twin version)
Options	Motorized pantograph stabilizer press Gravity stabilizer press Lifting device Single band lower Double twin band lower

Applications: Paper, Cardboards, Ceramic, Plastic/Cans, Bags

AV1800

Rotating arm wrapping machine with top sheet dispenser

Film type	Stretch polyethylene
Production capacity	Up to 60 packs/hour
Options	Top sheet dispenser Motorized or Pneumatic top press, stabilizer Roping device

Applications: Paper, Cardboards, Ceramic, Plastic/Cans, Bags

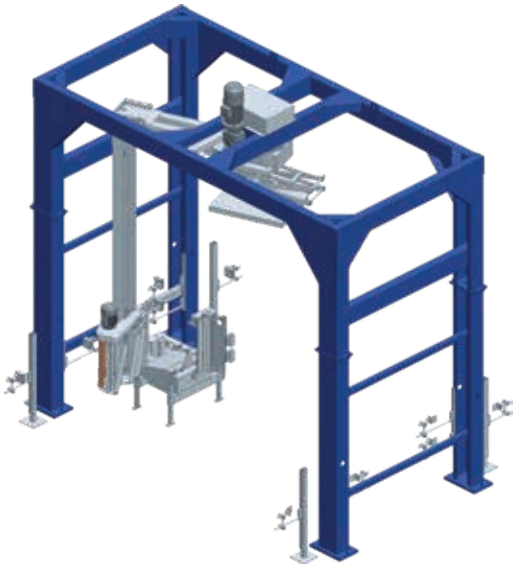

AV1620XL

Rotating arm wrapping machine

Film type	Stretch polyethylene
Production capacity	Up to 60 packs/hour

Applications: Paper, Cardboards, Ceramic, Plastic/Cans, Bags

AV300

Rotary table wrapping machine

Film type	Stretch polyethylene
Production capacity	Up to 35 packs/hour
Options	Top press Top sheet dispenser Motorized pre-stretch system

Applications: Paper, Cardboards

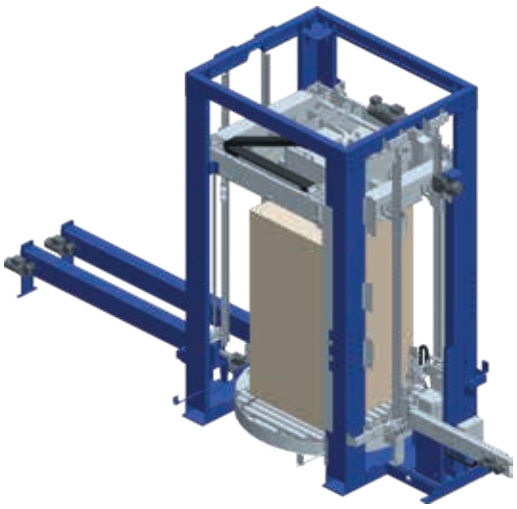

AVFP2

Combined strapping/wrapping machine

Strapping heads that can be used	VYBRO PLus / SONIC Plus TR1400 / TR1400HD (PET / PP)
Options	Edgeboard application device

Applications: Cardboards

OMS GROUP®

PACKAGING LINES

PACKAGING SOLUTIONS. SINCE 1949

PALLETLESS
PACKAGING TECHNOLOGY

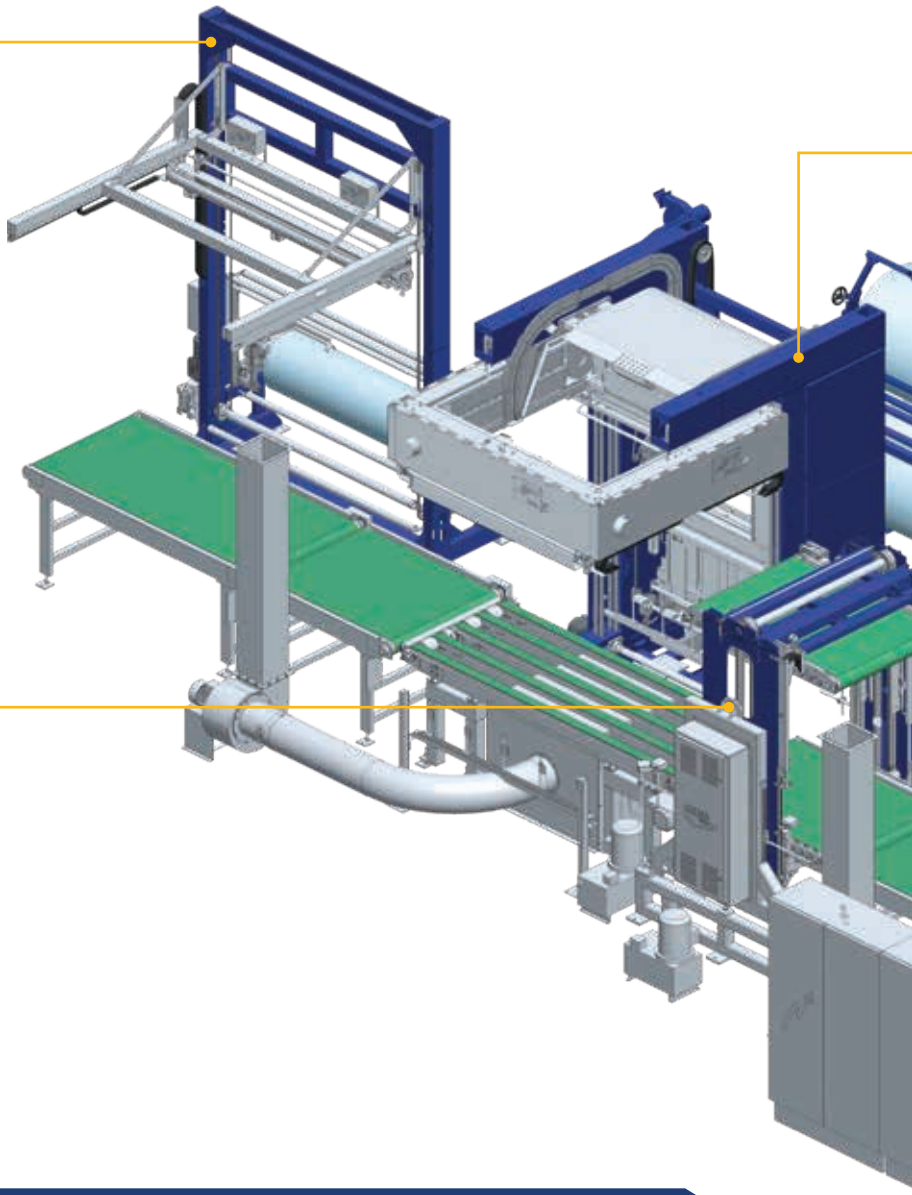

TOP SHEET DISPENSER MTF10

Automatic film application system with top sheet dispenser to apply a sheet of thermoshrinking film on top of the pack. The sheet is taken from a coil installed on the machine and it is made to protrude from the pack as needed.

ROTATOR RT02

Automatic rotation system with which it is possible to turn the pack by 180° in order to obtain a perfectly sealed packaging. Pack compression is controlled by an oil-pressure unit.

TECHNICAL DATA

Palletless lines with different production capacities are available:

Pack dimensions	1050mm x 1250mm x 1370mm
Max weight	2200 Kg
Film thickness	140 mk
Output:	60 / 80 / 100 Pack /Hour

The **Palletless packaging technology** is a modular line that can be easily adapted to the costumer's manufacturing needs. This packaging solution brings many benefits, first of all, a money saving due to the costs reduction for the purchase of pallets and their processing and in the secondly a space reduction due to smaller size of the load.
Another benefit comes from the packaging method, the film shrinking ensures the highest impermeability of the packs, making it possible to store them outdoors.

COMBINED SHRINK HOODING AT53

(or IS43 on alternative request)

Hooding and hot air shrink system with four linear burners (OMS patent and validation n. DG2217 BL 0557 issued by the German Gas Institute), which guarantee a thermal balance to favour the use of a very low thickness and the ideal heat distribution. The hooding machine can work automatically even with different coils with equal or different dimensions and thicknesses.

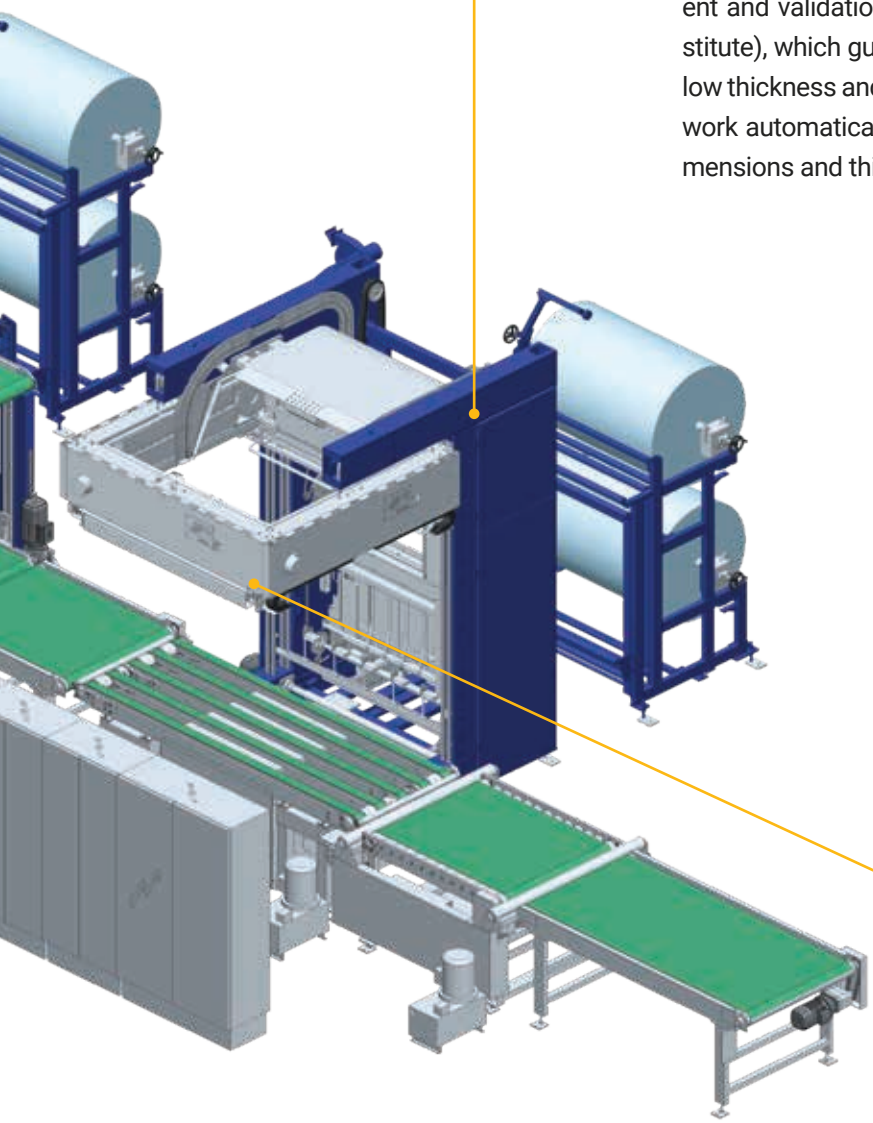

OMS in the World

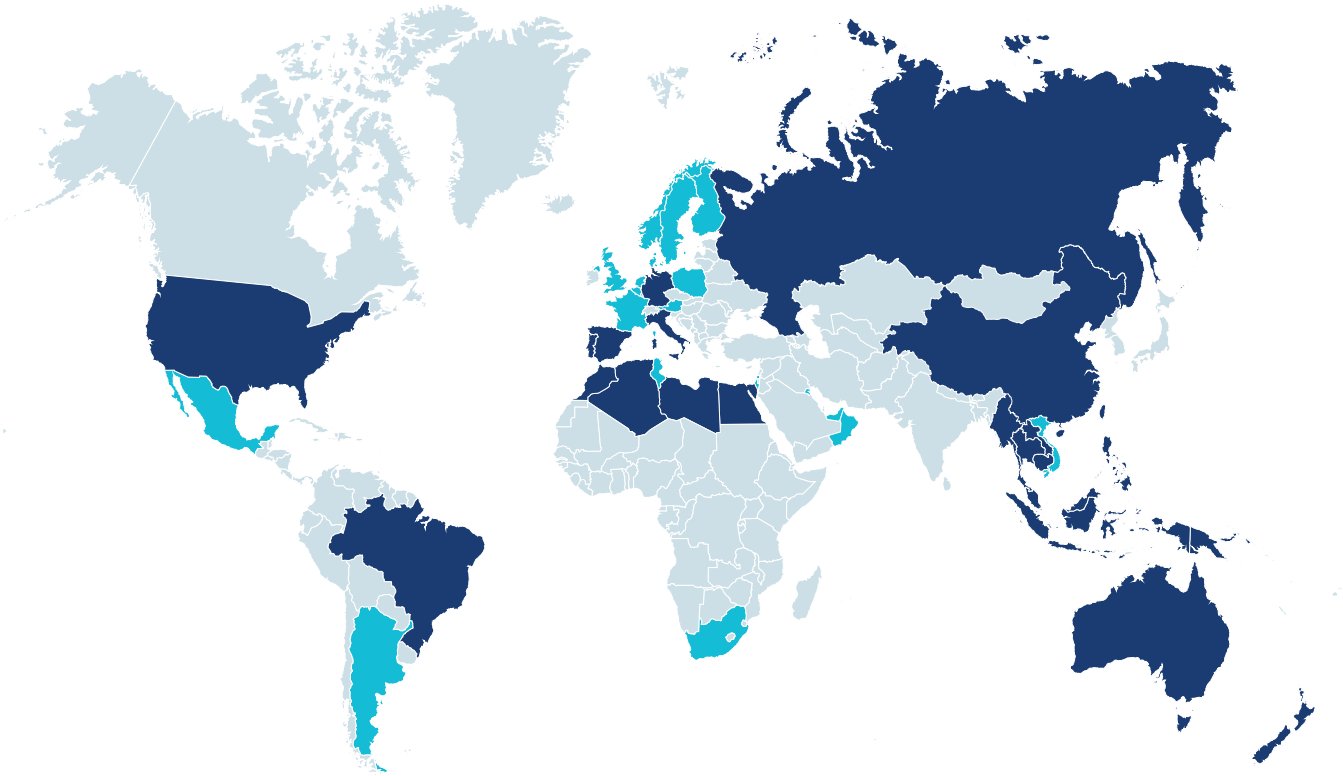

Subsidiaries Distributors

ITALY www.omsspa.com www.omstrap.it www.marpak.it	**GERMANY** www.oms-ips.com	**SPAIN** www.omsespana.com	**PORTUGAL** www.embalcer.pt	**RUSSIA** www.omssystems.ru
MAGHREB contact@omsmaghreb.com	**SINGAPORE** www.omssin.com.sg	**BRASIL** www.omsbr.com.br	**USA** www.greenbridge.com	**AUSTRALASIA** www.omsaus.com.au
THAILAND www.omsthai.com	**UK** www.gordianstrapping.co.uk	**AUSTRIA** www.riegler-verpackungstechnik.com	**BENELUX** www.certis.be	**FRANCE** www.getra.fr
UAE / OMAN / KUWAIT www.consentplastic.ae	**DENMARK** www.walpak.dk	**FINLAND** www.telpak.fi	**MEXICO** enrico@italcer.net	**ARGENTINA** www.exim-consult.com
ISRAEL www.mmts.co.il	**TUNISIA** www.toupackgroup.com	**VIETNAM** sales_advance@hcm.fpt.vn	**SOUTH AFRICA** www.futurepack.co.za	

For additional details, visit: **www.omsspa.com/en/the-group**

Officina Meccanica Sestese S.p.A.

Via Borgomanero, 44 - 28040 Paruzzaro (NO)

Tel.+39 0322 541411 - Fax +39 0322 53157

www.omsspa.com info@omsspa.com